PANTONE REPORT : THE PAGES OF MICHEL DAVID

PAGE 8

USE OF THE GEET PANTONE AS A BURNER

Page created on 05/23/2001

Back to the M.David menu

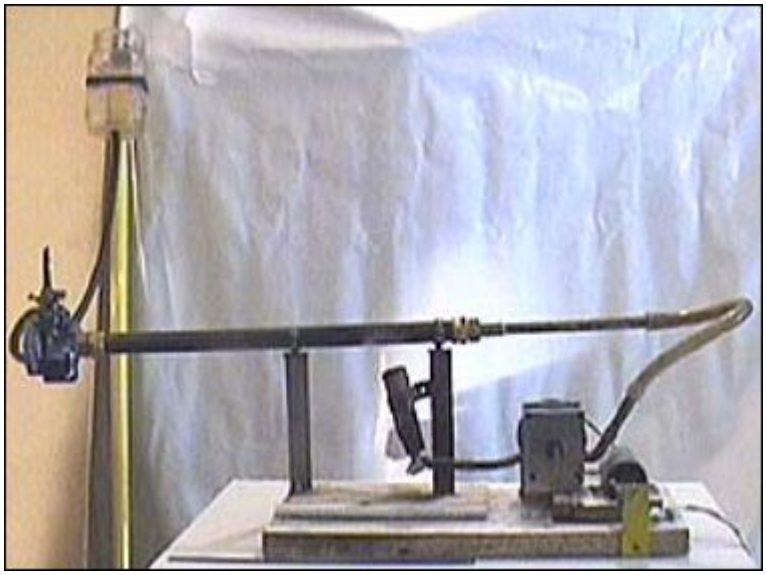

As Mr. PANTONE recommends, you can use your reactor to make a burner capable of using different types of fuel.

First, I will describe the realization of a small assembly that can allow you to evolve towards the construction of an oil boiler burner operating in all or nothing or in continuous mode.

Warning: as a precaution, the experiments on this assembly must be done in the open air and they are of course under the responsibility of each experimenter.

To do this first experiment, you need little material and it is easy to find inexpensively.

So you need:

- **A small air compressor with its drive motor.**
- **A small 50cc moped carburetor.**
- **A PANTONE reactor that you will make with a tube and a steel rod (see my previous pages).**
- **Some copper pipes and various fittings.**

Here is the schematic diagram of the installation.

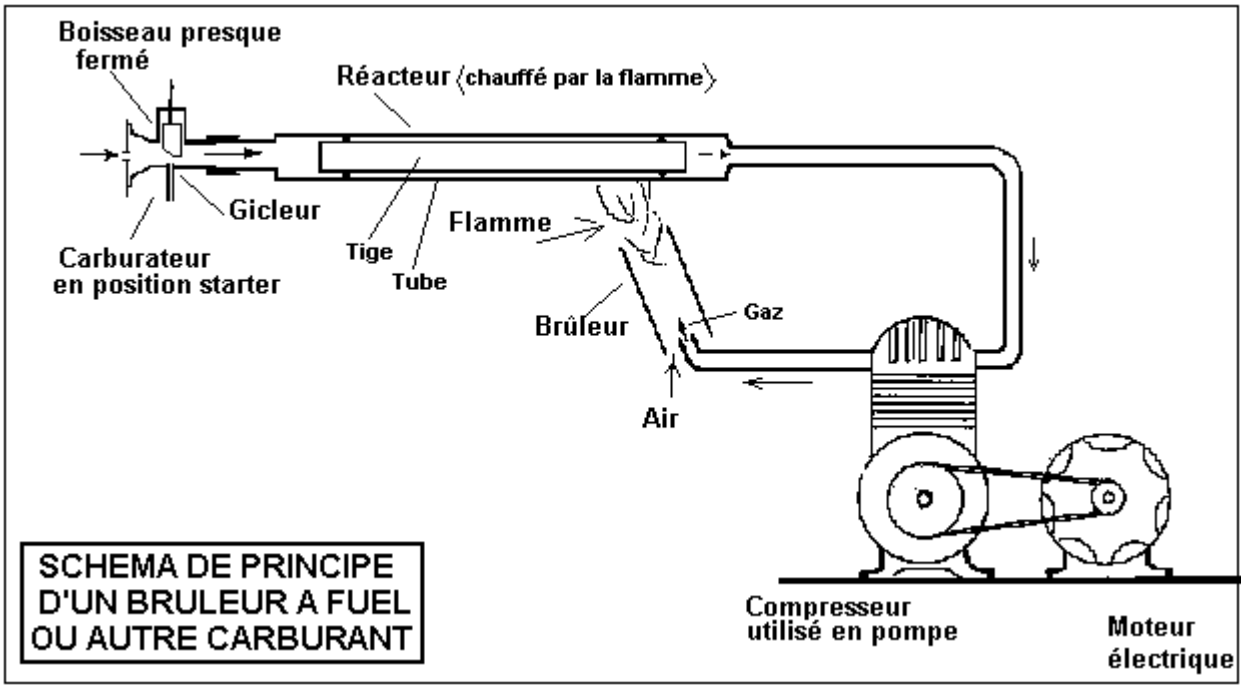

Comments and operation.

After examining this diagram we see that the matter is so simple that it is difficult to comment on it.

The reactor is made of a steel rod 30 cm long and 14 mm in diameter. It is placed in a tube with an internal diameter of 16 mm and 40 cm long.

At one end is the carburetor which will operate in the choke position if the supercharger is small and doesn't suck much.

Tubes of 12 or 14 will connect the outlet of the reactor to the suction side of the compressor and the outlet of the latter (always in copper pipe) will go to the burner simply consisting of the end of the pipe and a sleeve made with a piece of pipe large diameter. Depending on the flow of the compressor, you will have to grope the design of this burner so that the flame wants to stabilize.

You will also have to grope for the adjustment of the carburetor which will also depend on the suction power of your compressor. If the suction seems too large to you, you can modify it with a different set of pulleys. So that the flame does not pulsate too much, it

would be good to have a two-cylinder compressor. As you can see from the photos from my experience, I used a vane pump of my own making, but not everyone is lucky enough to have a workshop to make this kind of device.

IMPORTANT: never insert gas reserves either between the reactor and the compressor, and especially between the latter and the burner, to avoid any risk of explosion.

OPERATION.

This assembly starts without problem cold with heating "fuel oil".

When everything is OK, put the carburetor in the choke position and start the compressor.

With a burning lamp on, present the flame at the base of the burner, it will light yellow and may remain on if you are lucky that the proportions of your burner are good, otherwise you will have to "tinker" the one here so that the flame does not go out.

Once this result has been obtained, the flame being of course directed on the reactor, you will have to wait one to two minutes for it to be hot, before seeing it turn blue with the sound of a blowtorch. The combustion will continue in this way as long as you want.

Yellow flame at the start Blue flame after 1.23 minutes Blue flame detail

Under the reactor, the flame inside the burner

The temperature of the flame is quite high since it causes a steel rod to turn white (temperature estimated at 1200 ° C).

Steel blade and rod heated to white in a few seconds

I will continue my experiment, with the intention of "burning" a certain proportion of water as with the engines, either with a carburettor or with a bubbler.

To be continued...

Page 1 Page 2 Page 3 Page 4 Page 5 Page 6 Page 7 Page 8
Page 9 Page 10 Page 11 Page 12 Page 13 Page 14 Page 15 Page 16